Rexroth
Bosch Group

4/3 directional control valve, pilot operated, with electric position feedback and integrated electronics (OBE)

RE 29077/03.10 1/16
Replaces: 01.09

Type 4WRVE 10...27, symbols V, V1

Sizes 10, 16, 25, 27
Component series 2X
Maximum operating pressure P, A, B 350 bar (size 27: 280 bar)
Rated flow 40...430 l/min (Δp = 10 bar)

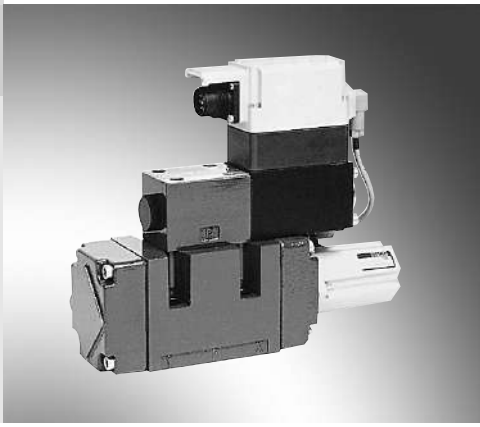

Type 4WRVE 10

Table of contents

Contents	Page
Features	1
Ordering code	2
Function, section	3
Symbols	4
Test and service devices	4
Technical data	5 and 6
Electrical connection	7
Technical notes for the cable	7
Integrated electronics	8
Characteristic curves	9 to 11
Unit dimensions	12 to 14

Information on available spare parts:
www.boschrexroth.com/spc

Features

- Pilot operated high-response 4/3 directional control valve size 10 to size 27, with control spool and bushing in servo quality
- Integrated electronics (OBE) with position controller for pilot control and main stage, calibrated in the factory
- Main stage in servo quality with position feedback
- Flow characteristics
  - M = progressive with fine control edge
  - P = inflected characteristic curve
  - L = linear
- Electric port 11P+PE
  Differential amplifier signal input with interface B5 ±10 V

Ordering code

4WRV | E | | | | –2X/G24 | | K0/B5 | M | *

with **integrated** electronics **= E**

Size
= 10
= 16
= 25
= 27 [1]

Control spool symbols
4/3 directional design

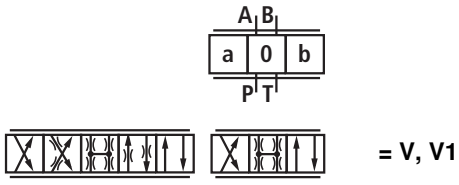

= V, V1

For V1:
P → A: q_v B → T: q_v/2
P → B: q_v/2 A → T: q_v

Rated flow
at 10 bar valve pressure differential
(5 bar/control edge)

Size 10
40 l/min [2] **= 40**
55 l/min [3] **= 55**
70 l/min [2] **= 70**
85 l/min [3] **= 85**

Size 16
90 l/min [2] **= 90**
120 l/min [3] **= 120**
150 l/min [2] **= 150**
200 l/min [3] **= 200**

Size 25
300 l/min [2] **= 300**
370 l/min [3] **= 370**

Size 27
430 l/min [1] [3] **= 430**

Flow characteristics
M = Progressive with linear fine control (up to 20 %)
P = Inflected characteristic curve, linear (inflection at 40 %)
L = Linear

2X = Component series 20 to 29
(unchanged installation and connection dimensions)

G24 = **Supply voltage of the electronics**
+24 V direct current

No code = **Pilot oil supply "x", pilot oil return "y"**
"x" = external, "y" =external
E = "x" = internal, "y" =external
ET = "x" = internal, "y" = internal
T = "x" = external, "y" = internal

K0 = **Electrical connection**
without mating connector,
with unit connector
according to DIN 43563-AM6
Mating connector – separate order

B5 = **Interface of the control electronics**
Command value input ±10 V

M = **Seal material**
NBR seals
suitable for mineral oils
(HL, HLP)
according to DIN 51524

Further details
in the plain text

[1] Size 27 is the high-flow version of size 25, the connection bores P, A, B, T are designed with Ø32 mm in the main stage. In the manifold, ports P, A, B, T can be drilled with max. Ø30 mm in deviation from standard ISO 4401-08-08-0-05. Thus, the valves allow for higher flow values Q_A : Q_B

[2] Q_N: Flow characteristics "P"

[3] Q_N: Flow characteristics "M" or "L"

Function, section

Structure

The valve consists of 3 main assemblies:

– Pilot control valve (1) with control spool and bushing, return springs, double stroke solenoid and inductive position transducer

– Main stage (2) with centering springs and position feedback

– Integrated control electronics (3)

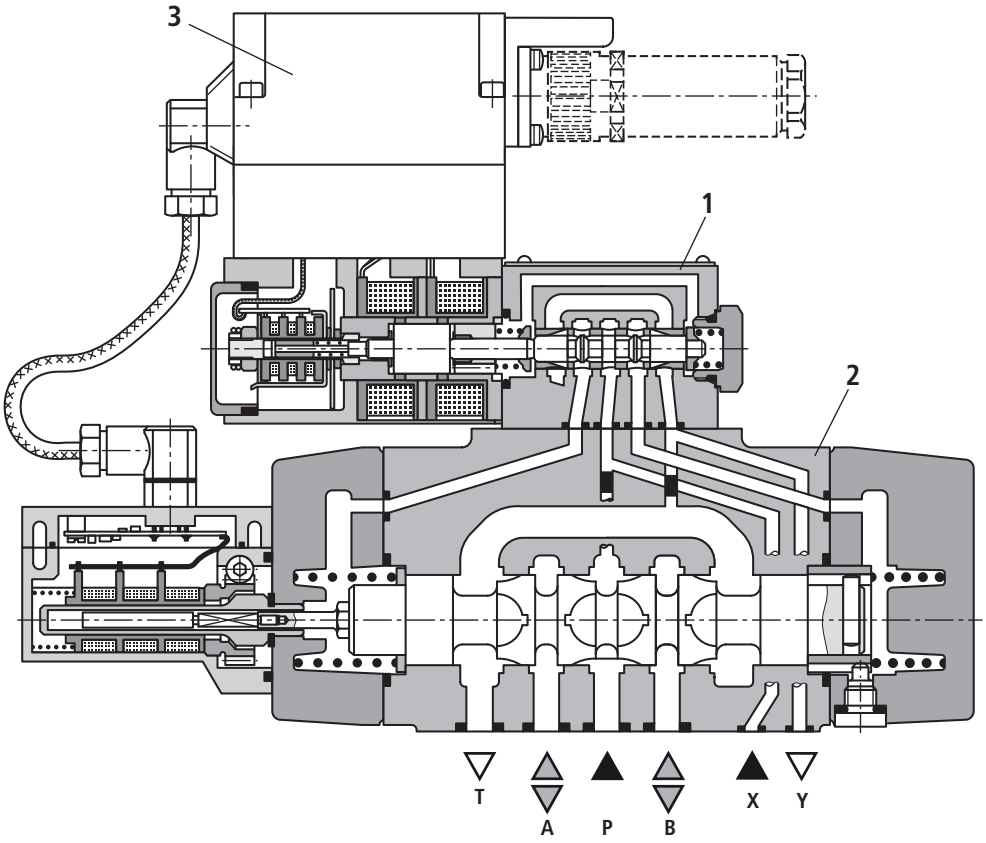

Functional description

In the integrated electronics, the specified command value is compared with the actual position value of the main stage control spool. In case of control deviations, the double stroke solenoid is activated which adjusts the pilot control spool due to the changed magnetic force. The flow released through the control cross-sections causes the displacement of the main control spool, the stroke/control cross-section of which is controlled proportionally to the command value. If the command value is 0 V, the electronic controls the control spool of the main stage in the center position.

The pilot control valve is supplied with the pilot oil either internally through port P or externally through port X. The return to the tank can be implemented internally via port T or externally via port Y.

If deactivated or in case of no release, the pilot control valve is undefined in P-B/A-T (preferred) or P-A/B-T, the main stage can be completely controlled.

Symbols

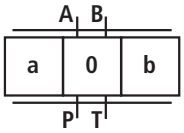

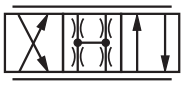

Type ...–3X...

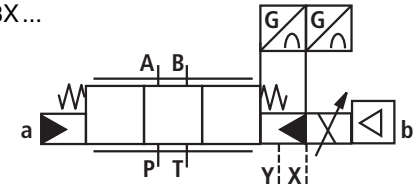

Type ...–3X...E...

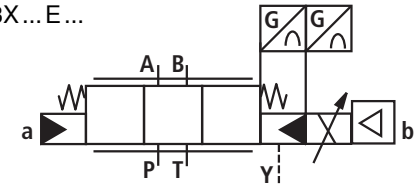

Type ...–3X...ET...

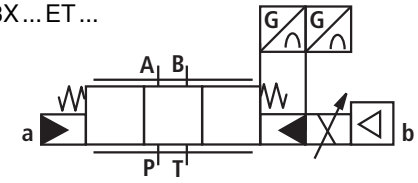

Type ...–3X...T...

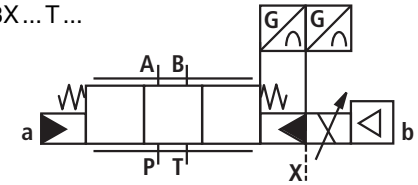

Symbol, detailed
(pilot oil supply and pilot oil drain external)

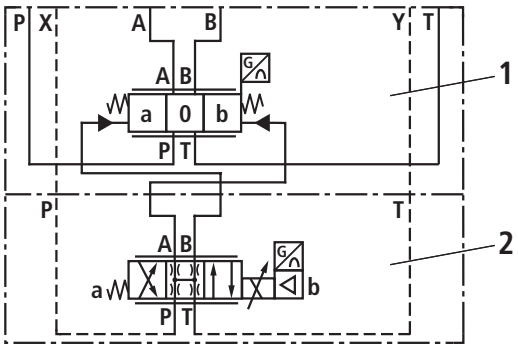

1 Main valve
2 Pilot control valve

Test and service devices

– Type VT-VETSY-1 service case with test device, see RE 29685
– Measuring adapter 11P+PE type VT-PA-1, see RE 30067

Technical data

general													
Type			Spool valve, pilot operated										
Actuation			Directional control valve size 6 - OBE, with position controller for pilot control valve and main stage										
Type of connection			Subplate mounting, porting pattern according to ISO 4401-...										
Installation position			Any										
Ambient temperature range		°C	–20...+50										
Weight		kg	**Size 10** 8.0				**Size 16** 10.4				**Size 25** 18.2		**Size 27** 18.2
Vibration resistance, test condition			Max. 25 *g*, room vibration test in all directions (24 h)										
hydraulic (measured with HLP 46, ϑ_{oil} = 40 °C ±5 °C)													
Hydraulic fluid			Hydraulic oil according to DIN 51524…535, other media upon request										
Viscosity range	recommended	mm^2/s	20...100										
	max admissible	mm^2/s	10...800										
Hydraulic fluid temperature range		°C	–20...+65										
Maximum admissible degree of contamination of the hydraulic fluid cleanliness class according to ISO 4406 (c)			Class 18/16/13 [1]										
Flow direction			According to symbol										
Rated flow at Δp = 5 bar per edge [2]			**Size 10**				**Size 16**				**Size 25**		**Size 27**
		l/min	40	55	70	85	90	120	150	200	300	370	430
Max. operating pressure	Ports P, A, B external pilot oil supply	bar	350				350				350		350
	Ports P, A, B internal pilot oil supply	bar	250										
	Ports T, X, Y	bar	250										
Min. pilot oil pressure "pilot control stage"		bar	10										
Q_{max}		l/min	170				450				900		1000
Q_N pilot control valve		l/min	8				24				40		40
Zero flow pilot control valve at 100 bar		cm^3/min	< 180				< 300				< 500		< 500
Zero flow main stage at 100 bar		cm^3/min	< 400		< 600		< 1000				< 1000		< 1000
static / dynamic													
Hysteresis		%	< 0.1 hardly measurable										
Manufacturing tolerance Q_{max}		%	< 10										
Actuating time for signal step (at X = 100 bar)		0...100 %	12				15				23		23
		0...10 %	6				7				10		10
Actuating time for signal step (at X = 10 bar)		0...100 %	40				50				90		90
		0...10 %	20				20				30		30
Switch-off behavior			after electrical shut-off: Pilot control valve not defined in P-B/A-T or P-A/B-T, main stage can be completely controlled (PB/AT or PA/BT)										
Temperature drift			Zero shift < 1% at ΔT = 40 °C										
Zero compensation			ex factory ±1 %										

[1] The cleanliness classes specified for the components must be complied with in hydraulic systems.
Effective filtration prevents faults and at the same time increases the service life of the components.
For the selection of the filters, see technical data sheets RE 50070, RE 50076 and RE 50081.

[2] Flow with different Δp $Q_x = Q_{nom} \cdot \sqrt{\frac{\Delta p_x}{5}}$

Technical data

electric, control electronics integrated in the valve			
Relative duty cycle	%	100 ED, max. power consumption 30 VA (24 V=)	
Protection class		IP 65 according to DIN 40050	
Port		Plug-in connector, 11P+PE	Data
Supply 24 $V=_{nom}$ [1)]	[2)]	[1] [2]	+24 $V=_{nom}$, fuse protection 2.5 A_F (output stages) 0 V power ground
	[3)]	[9] [10]	+24 $V=_{nom}$ Signal part 0 V Signal ground
Input signal ±10 V	[4)]	[4] [5]	U_{IN} $\overline{U}_{IN}$ } Differential amplifier, R_i = 100 kΩ
Actual value signal (LVDT)		[6] [7]	±10 V=, R_a = 1 kΩ 0 V, reference point
Release input		[3]	>8.5 V to 24 $V=_{nom}$ (max. 40 V=) R_i = 10 kΩ
Messages	[5)]	[8] [11]	Acknowledgement release +24 V= Error message: no error +24 V=
Protective earthing conductor		⏚	Connect only if 24 V = system transformer does not comply with standard VDE 0551
Electromagnetic compatibility tested according to		EN 61000-6-2: 2005-08 EN 61000-6-3: 2007-01	

[1)] 24 $V=_{nom}$ – min. 21 V=
– max. 40 V=

[2)] U_B (pin 1) = output stage supply
– valve "OFF" <13.4 V=
– valve "ON" >16.8 V=
no error message (pin 11)

[3)] U_S (pin 9) = electronics supply
– valve "OFF" <16.8 V=
error message (pin 11)
– valve "ON" >19.5 V=
no error message (pin 11)

[4)] inputs: voltage resistant up to max. 50 V

[5)] Messages are loadable with max. 20 mA and short-circuit proof against ground

11P+PE

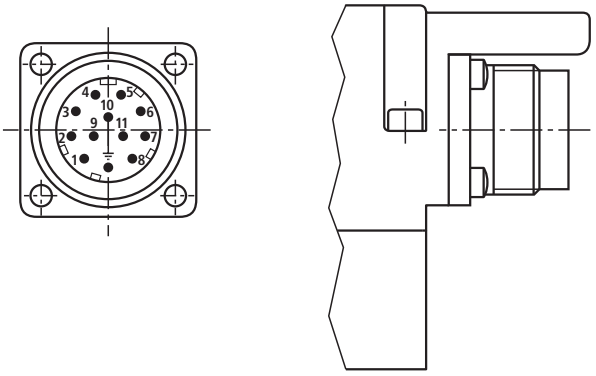

Note

Pilot operated 4/3 directional control valves fulfill their function only in active closed control loops and do not have a secured basic position when deactivated. Therefore, "additional isolator valves" are required in many applications and must be taken into account for the On/Off series.

Electrical connection

Electric data, see page 6

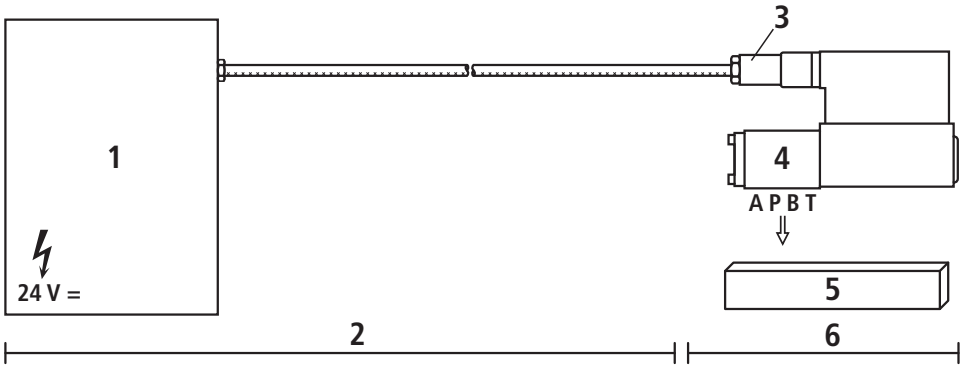

1 Control
2 Provided by the customer
3 Mating connector
4 Valve
5 Contact surface
6 Provided by Rexroth

Technical notes for the cable

Version:
- Multi-wire cable
- Litz wire structure, very fine wires according to VDE 0295, class 6
- Protective earthing conductor, green-yellow
- Cu shield braid

Type:
- e.g. Oilflex-FD 855 CP (company Lappkabel)

Number of wires:
- Depends on the valve type, connector type and signal assignment

Line Ø:
- 0.75 mm^2 up to a length of 20 m
  1.0 mm^2 up to a length of 40 m

Outer Ø:
- 9.4...11.8 mm – Pg11
  12.7...13.5 mm – Pg16

Note
Electric signals taken out via control electronics (e.g. actual value) must not be used for the deactivation of safety-relevant machine functions!
(See also the European standard "Safety requirements for fluid power systems and their components - Hydraulics", EN 982!)

Integrated electronics

Block diagram/Pinout
version B5: U_E ±10 V

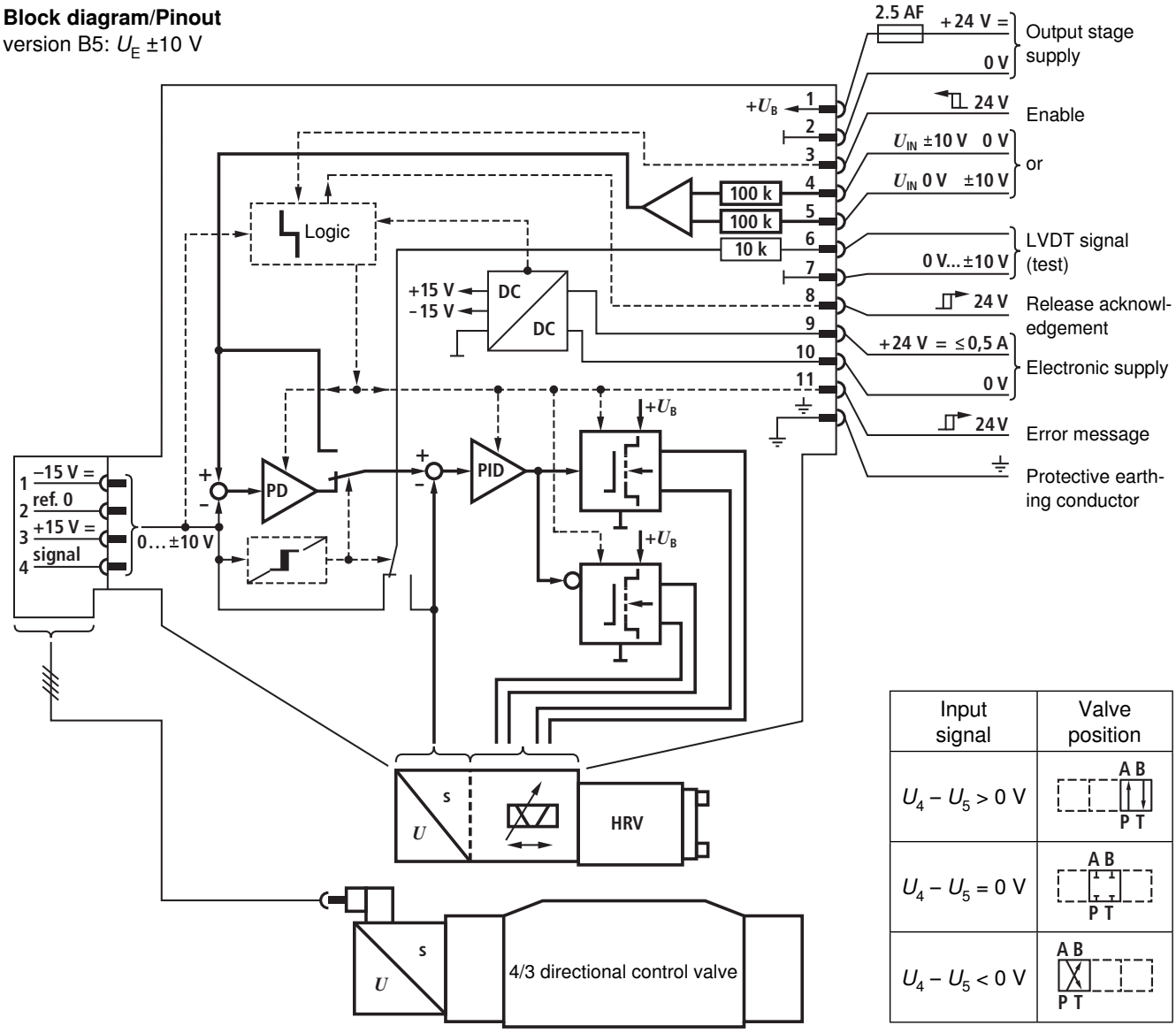

Input signal	Valve position
$U_4 - U_5 > 0$ V	
$U_4 - U_5 = 0$ V	
$U_4 - U_5 < 0$ V	

Pin assignment 11P+PE
version B5: U_E ±10 V
(R_i = 100 kΩ)

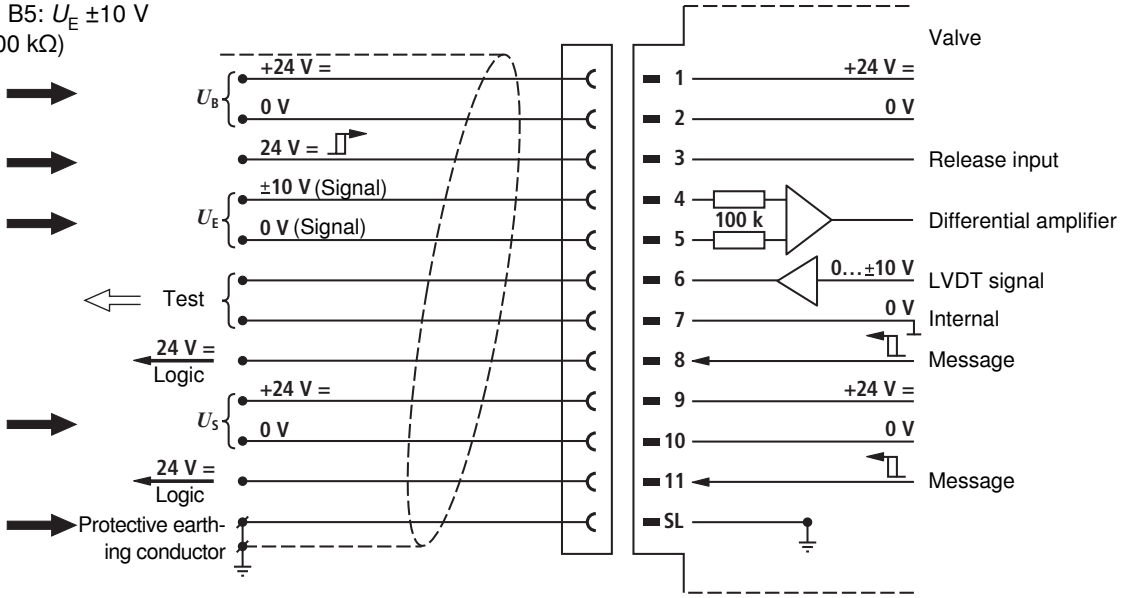

Characteristic curves (measured with HLP 46, ϑ_{Oil} = 40 °C ±5 °C)

Flow – signal function $Q = f(U_E)$

Flow characteristics M

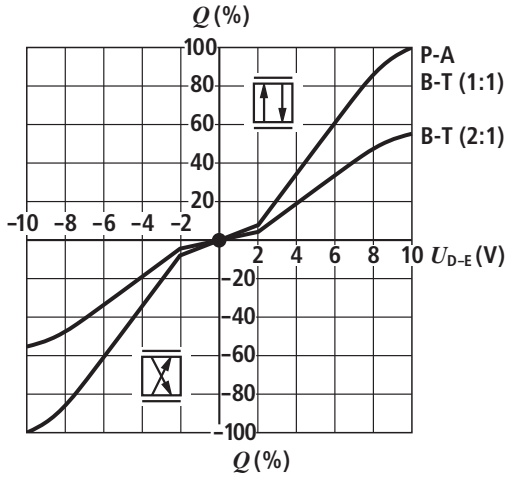

Flow characteristics P

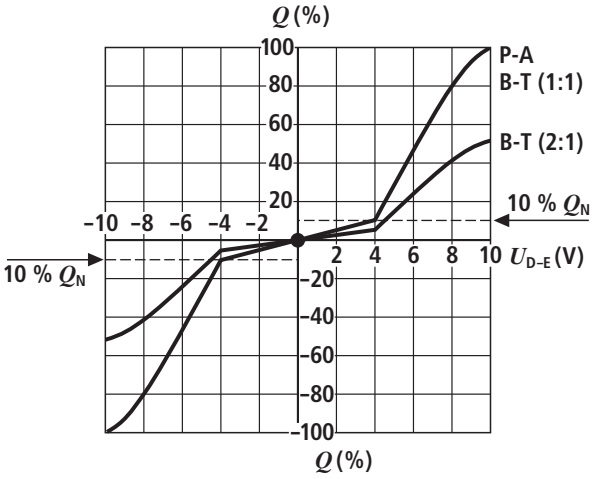

Flow characteristics L

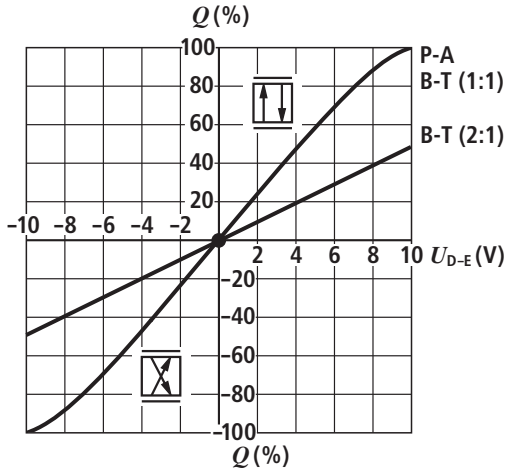

Characteristic curves (measured with HLP 46, ϑ_{Oil} = 40 °C ±5 °C)

Pressure gain $\Delta = f(U_E)$

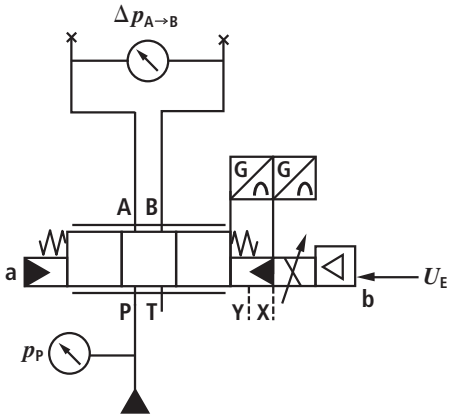

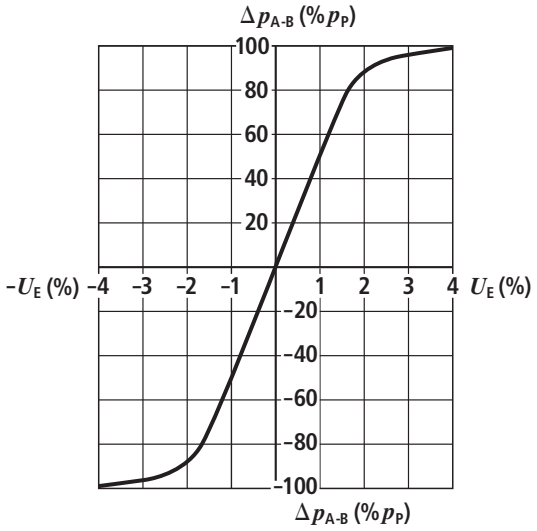

Step function 0 → 100 %

Size 10

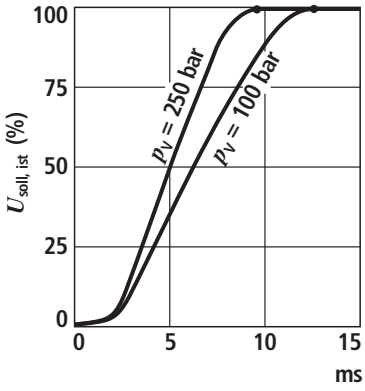

Size 16

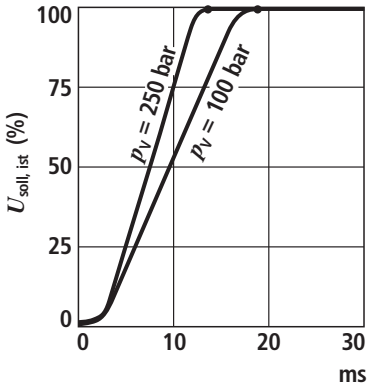

Size 25/27

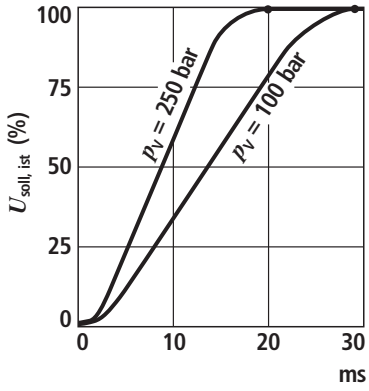

Characteristic curves (measured with HLP 46, ϑ_{Oil} = 40 °C ±5 °C)

Bode diagram

Size 10

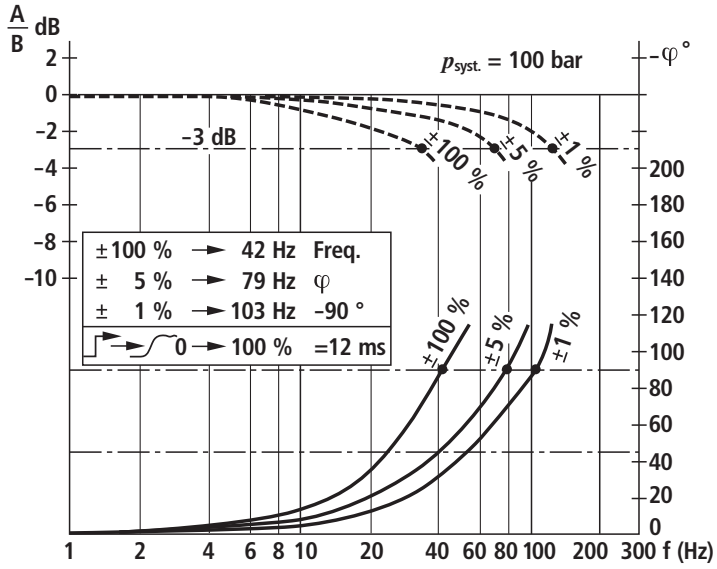

Size 16

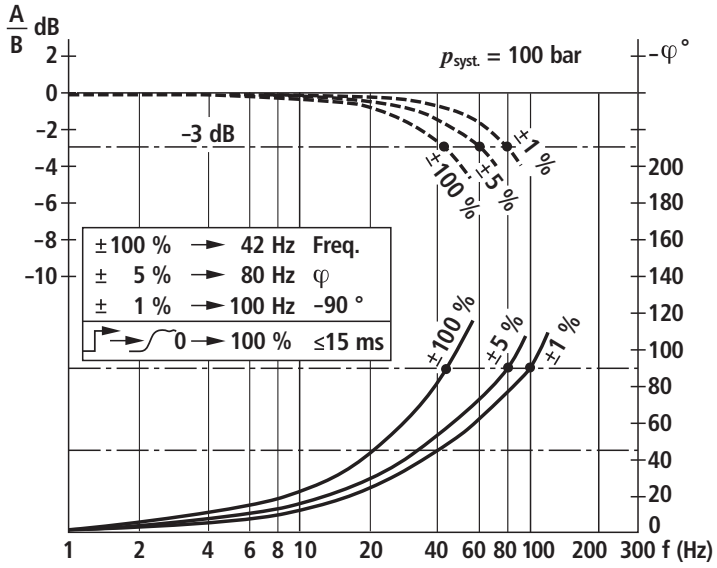

Size 25/27

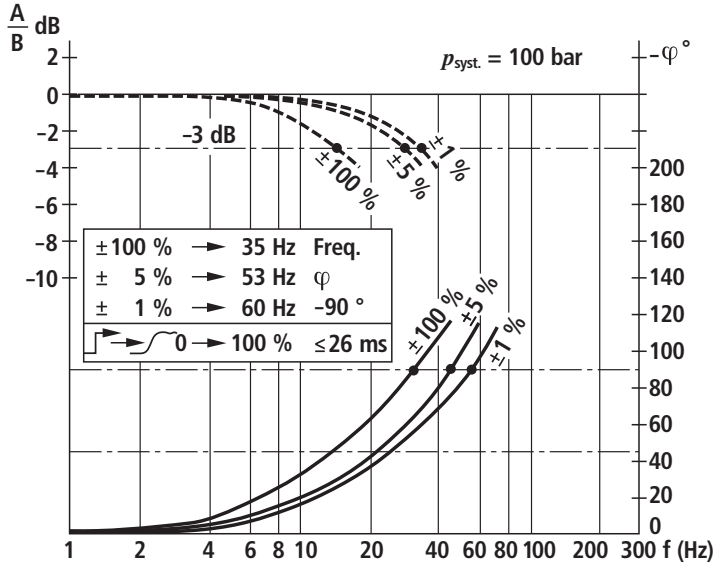

----- Amplitude
——— Phase

Unit dimensions size 10 (dimensions in mm)

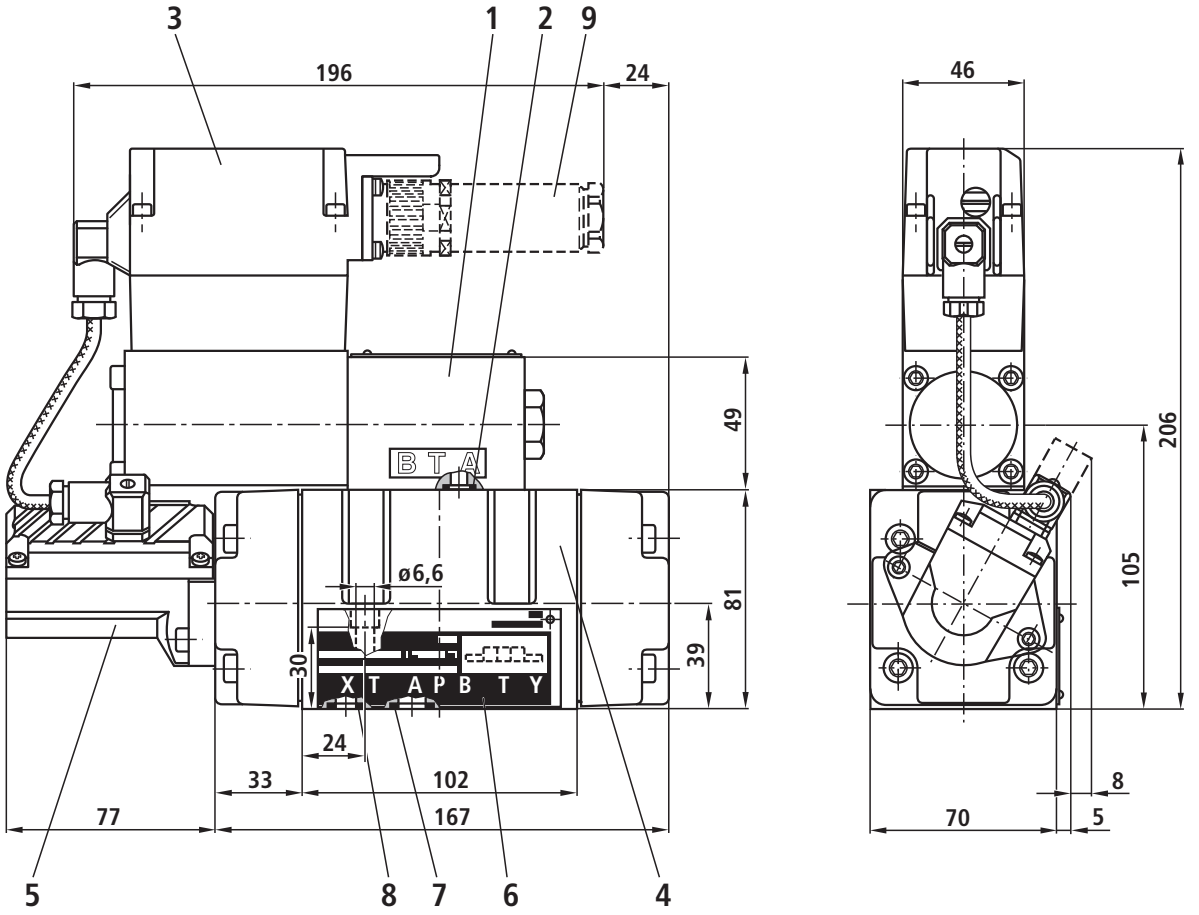

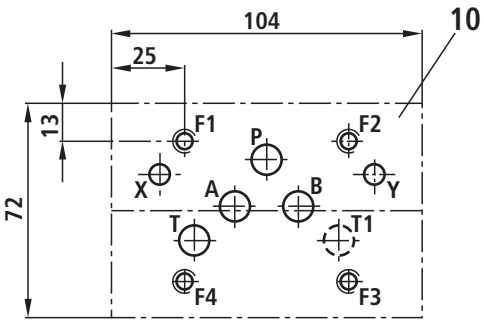

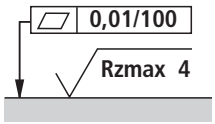

Required surface quality
of the valve mounting face

1 Pilot control valve
2 O-ring 9.25x1.78 (ports P, A, B, T)
3 Integrated electronics
4 Main valve
5 Inductive position transducer (main valve)
6 Name plate
7 O-ring 12x2 (ports P, A, B, T, T1)
8 O-ring 10x2 (ports X, Y)
9 Mating connector not included in the scope of delivery, see technical data sheet RE 08008 (separate order)
10 Machined valve mounting face, porting pattern according to ISO 4401-05-05-0-05
Deviating from the standard:
ports P, A, B, T, T1 Ø 10.5 mm

Subplates, see technical data sheet RE 45055 (separate order)

Valve mounting screws (separate order)
The following valve mounting screws are recommended:

4 hexagon socket head cap screws
ISO 4762-M6x40-10.9-N67F821 70
(galvanized according to Bosch standard N67F821 70)
tightening torque M_A = 11+3 Nm

Mat. no. 2910151209

Unit dimensions size 16 (dimensions in mm)

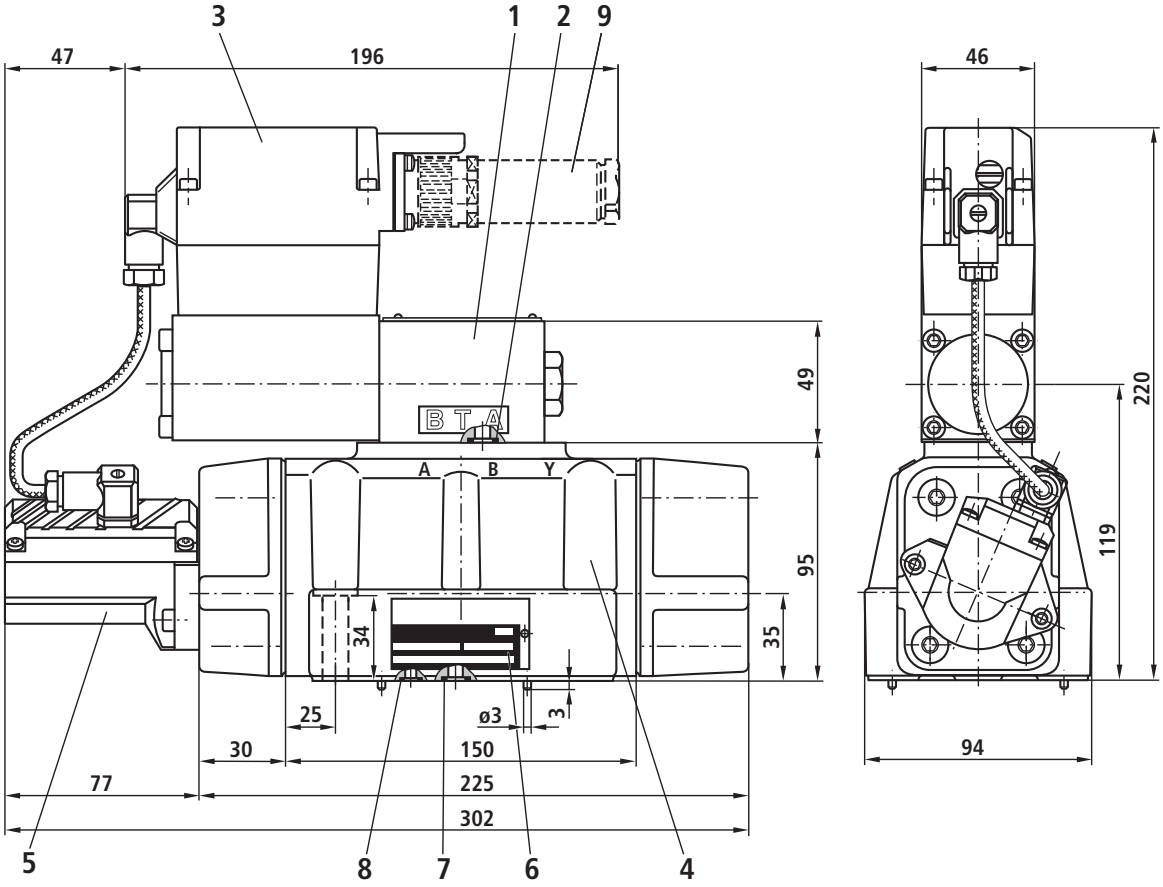

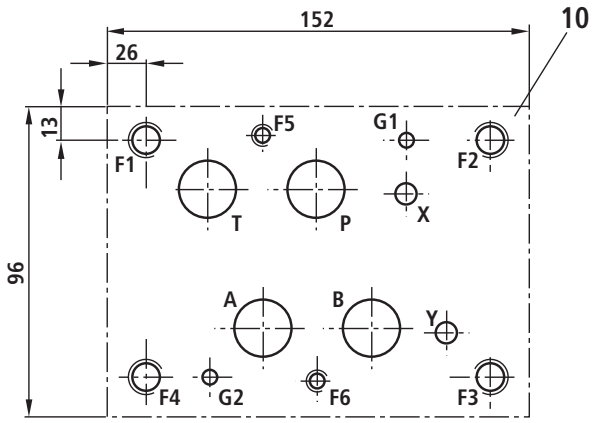

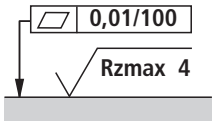

Required surface quality of the valve mounting face

1 Pilot control valve
2 O-ring 9.25x1.78 (ports P, A, B, T)
3 Integrated electronics
4 Main valve
5 Inductive position transducer (main valve)
6 Name plate
7 O-ring 23x2.5 (ports P, A, B, T)
8 O-ring 9x2 (ports X, Y)
9 Mating connector not included in the scope of delivery, see technical data sheet RE 08008 (separate order)

10 Machined valve mounting face, porting pattern according to ISO 4401-07-07-0-05
Deviating from the standard:
ports P, A, B, T Ø 20 mm

Subplates, see technical data sheet RE 45057 (separate order)

Valve mounting screws (separate order)
The following valve mounting screws are recommended:

2 hexagon socket head cap screws
ISO 4762-M6x45-10.9-N67F821 70
(galvanized according to Bosch standard N67F821 70)
tightening torque M_A = 11+3 Nm

Mat. no. 2910151211

4 hexagon socket head cap screws
ISO 4762-M6x40-10.9-N67F821 70
(galvanized according to Bosch standard N67F821 70)
tightening torque M_A = 50+10 Nm

Mat. no. 2910151301

Unit dimensions size 25/27 (dimensions in mm)

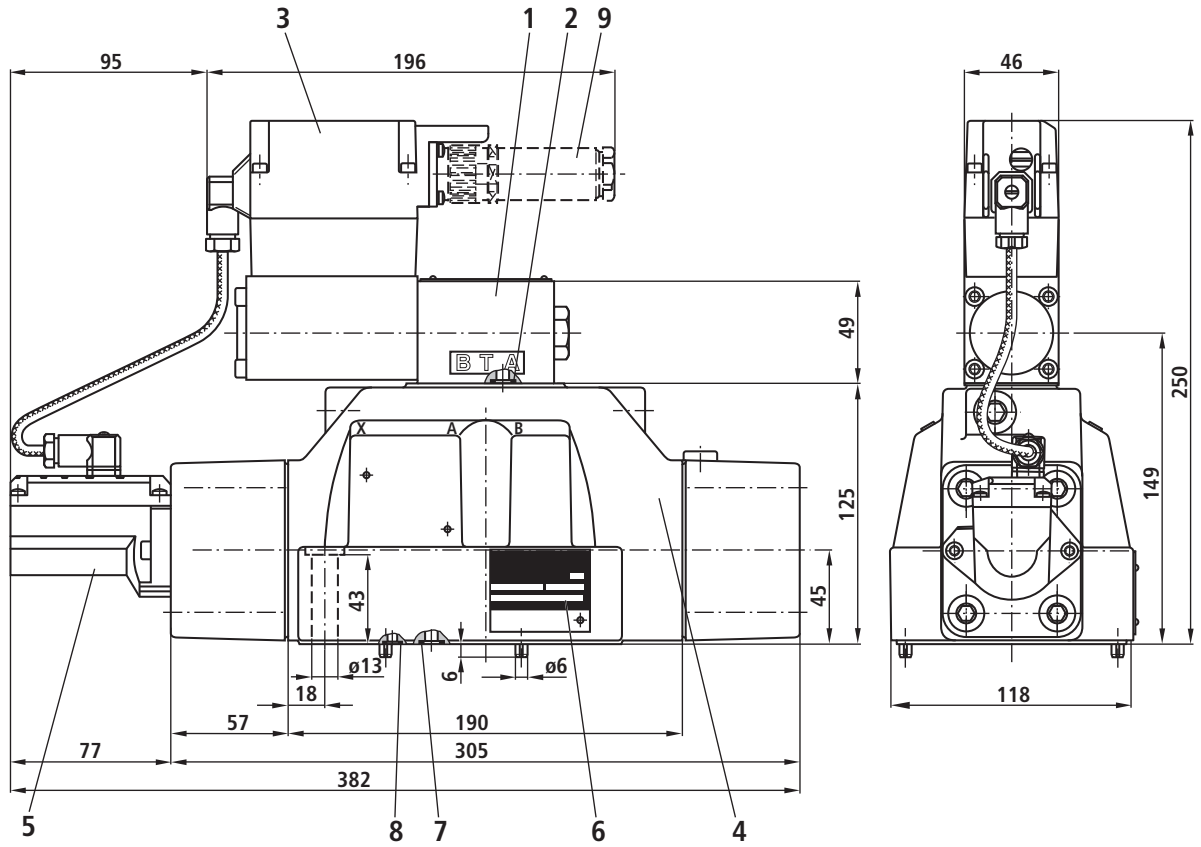

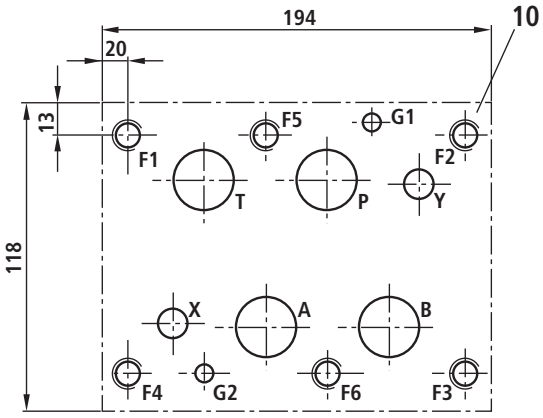

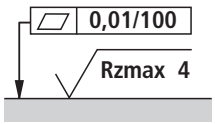

Required surface quality
of the valve mounting face

1 Pilot control valve

2 O-ring 9.25x1.78 (ports P, A, B, T)

3 Integrated electronics

4 Main valve

5 Inductive position transducer (main valve)

6 Name plate

7 O-ring (ports P, A, B, T)
Size 25: 28x3
Size 27: 34.6x2.62

8 O-ring 15x2.5 (ports X, Y)

9 Mating connector not included in the scope of delivery, see technical data sheet RE 08008 (separate order)

10 Machined valve mounting face, porting pattern according to ISO 4401-08-08-0-05
Deviating from the standard:
size 25: Ports P, A, B, T Ø 25 mm
size 27: Ports P, A, B, T Ø 32 mm

Subplates, see technical data sheet RE 45059 (separate order)

Valve mounting screws (separate order)
The following valve mounting screws are recommended:

6 hexagon socket head cap screws
ISO 4762-M12x60-10.9-N67F821 70
(galvanized according to Bosch standard N67F821 70)
tightening torquesize 25 M_A = 90+30 Nm,
size 27 M_A = 90±15 Nm

Mat. no. 2910151354

Notes

Notes

Bosch Rexroth AG
Hydraulics
Zum Eisengießer 1
97816 Lohr am Main, Germany
Phone +49 (0) 93 52 / 18-0
Fax +49 (0) 93 52 / 18-23 58
documentation@boschrexroth.de
www.boschrexroth.de

© This document, as well as the data, specifications and other information set forth in it, are the exclusive property of Bosch Rexroth AG. It may not be reproduced or given to third parties without its consent.
The data specified above only serve to describe the product. No statements concerning a certain condition or suitability for a certain application can be derived from our information. The information given does not release the user from the obligation of own judgment and verification. It must be remembered that our products are subject to a natural process of wear and aging.